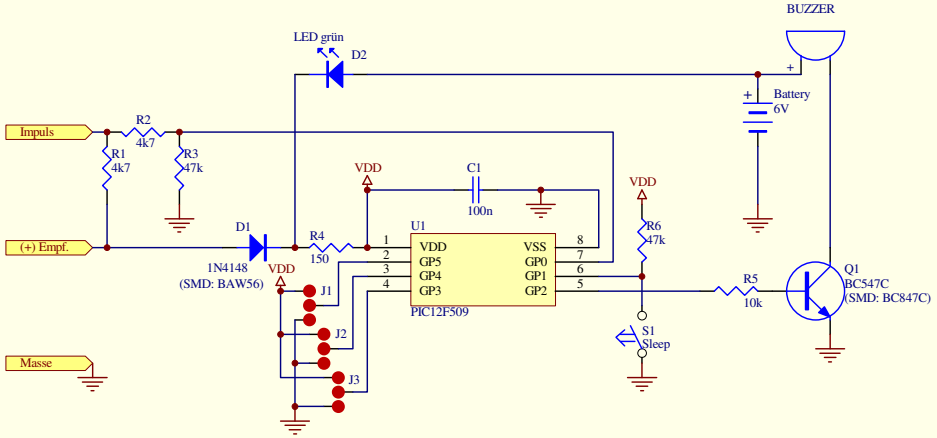

Title		
Size B	Number	Revision
Date: 4-Oct-2008		Sheet of
File: N:\1Otti\Piepser\Piepser_TH.Sch		Drawn By: